Neapolis University

HEPHAESTUS Repository **http://hephaestus.nup.ac.cy**

School of Architecture, Land and Environmental Sciences Conference papers

2006

Bioengineering Techniques for Soil Erosion Protection and Slope Stabilization

Georgi, Neratzia Julia

http://hdl.handle.net/11728/7565

Downloaded from HEPHAESTUS Repository, Neapolis University institutional repository

Bioengineering techniques for soil erosion protection and slope stabilization

N.J. GEORGI*, J. E. STATHAKOPOULOS**
*Dr. Landscape Architect, Tutor of Hellenic Open University, Spec. Scient. of Ministry of Envoronment, Planning and Public Works, P.O. Box. 13680, 10310, jgeorgi@tee.gr
**Department of Field Crops and Ecology
Aristotle University, Agronomist M.Sc. Works division, EGNATIA ODOS S.A. 16km Thessaloniki – Thermi Thessaloniki, GREECE. E-mail: istath@egnatia.gr

Abstract: - The use of plants for soil erosion protection and slope stabilization has a long tradition. Old methods with rocks and plants, structures of timber have been used over the past centuries.
Recently these old soil conservation and stabilization techniques have been rediscovered and improved. Biotechnical engineering methods have become part of geotechnical and hydraulic engineering and have helped bridge the gap between classical engineering disciplines, land use management, landscape architecture and biological sciences.
In this review the different uses of plants in hydraulic and geotechnical engineering design are presented. The core of this review is a comprehensive overview of the most important biotechnical construction methods used for soil erosion protection and slope stabilization. Methods, construction procedure, and the major advantages and disadvantages of these biotechnical methods are discussed. Considerations about construction and maintenance costs conclude in this review.

Key-Words: Soil erosion protection,slope stabilization, geotechnical engineering, biotechnical construction methods

1 Introduction

Biotechnical engineering techniques rely on biological knowledge to build geotechnical and hydraulic structures and to secure unstable slopes and banks. Whole plants or their parts are used as construction materials to secure unstable sites, in combination with other (dead) construction material. Thus biotechnical engineering does not replace traditional hydraulic and geotechnical engineering (e.g. geotextiles, or concrete blocks), but complements and improves other technical engineering methods.

In the following section the main types of biological methods using woody or wet land plants or their parts are discussed. Surface covering methods such as seeding, hydroseeding (Georgi, Belstou, Stathakopoulos, 2001), or rhizome plantings of herbaceous plants, as well as supplementary methods will not be dealt with her (for information see Schwab 1991). Biotechnical methods using willows and other woody plants are especially appropriate for improving existing technical structures. The emphasis of this section paper is on construction of biotechnical structures and their use. The major advantages and disadvantages of each method are summarized.

2 Materials and methods

2.1 Bush-mattress construction with wood pegs

Bush mattress construction with living brunches can be used (which will sprout) for protection and slope stabilization. They are built rectangular to the slope and in contour lines direction consistent of 15-20 or and 25-30 living branches of Salix, Eleagnus, Platanus e.t.c. each with length 60 cm and diameter 6-40 mm. The sprout buds of branches are bedded in the same direction and they tied up in fascines with 15-30 cm length in length fascines direction with touching between them.

The above construction can have length from few meters to all width slope.

The fascines stabilized on slope surface with wood pegs each with length 1.0 meter and diameter 4-7 cm. The wood pegs are driven into the soil through the mattress in ditches (depth:60-70 cm).

The above construction can dublicated set of fascines every 2-3 meters in slope direction according the cionditions of slope stabilization. The upside of slope and behind of the fascine can filled with soil or planted (plants cuttings) or seeded. (Figure 1).

This construction stabilize the soil, reduce the movement speed of rainning water, reduce the surface erosion and stabilize mass of soil especially if is combined with other methods.

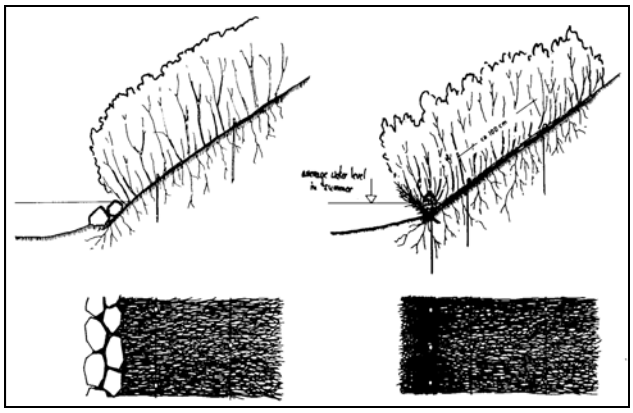

Fig. 1: Brush-mattress structures (Schiechtl and stern 1994)

advantages:

- Immediately effective after installation
- Dense root system and thicket developed
- Flexibility in preparation and protection
- Material easily available as structures also serve as a nursery for new plant material

disadvantages:

- High demand on material and labour
- Occasionally thinning of thicket necessary
- Labour intensive

Construction time : Only during dormant season
Costs: 1 to 5 hours/m2. (depending on material availability and site conditions)

Use: erosion control of banks and slopes, improvement of riprap, bank repair.

2.2 Wattle fences (wicker)

Chestnut pegs (length:1m, diameter 4-5 cm) driven into the soil (depth 50-70 cm) accorcing the contour lines every 1 meter.

Between these pegs (every 20 cm) shorter of living material (diameter 2-3 cm, length 60 cm) are driven in (depth 30cm) and strong rods of sprouting material (such as rods of Salix, Platanus) are woven around them. The ends of the woven rods are struck into the soil (depth 10 cm every 10 cm betrween them)

The construction is placed in part of the internal surface of slope (diastance 30 -50 cm). The part between slope and construction filled with excavations products or surface soil of slope. In that way stabilize and suitable flat surfaces created for planting. (Figure 2).

advantages:

- Rooted fences retain and stop moving soil, and establish terraces
- A flexible and rapid step towards a climax-like vegetation
- Easily combined with other methods

disadvantages:

- High labour and material costs and continuous control required
- Securing effect is small
- Large quantities of flexible branches are required (potential lack of local material)
- Easily damaged thus not sufficient for persistent rockfall

Construction time: Only fences made during the dormant season sprout
Costs: 0,75 – 1, 5 hours/meter.

While used extensively in the past, they are rarely constructed any longer because of their high labour costs and the danger of erosion of fine material from behind the fence.

Used for stabilization of top soil layers, slopes of fine material,

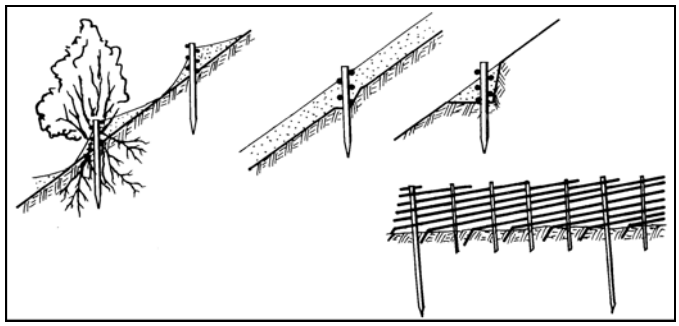

Fig. 2: Wattle (wicker) fences (Donat 1992)

2.3 Log brush barrier

This construction is predicated on treatment of flood control. Used to control the surface soil, reduce the runoff speed with infiltration of flood water.
The log brush barriers are wood parts of trees (diameter 20-25 cm length 6 m) (such as Cypressus, Pinus nigra, Quercus, e.t.c.) (Figure 3).

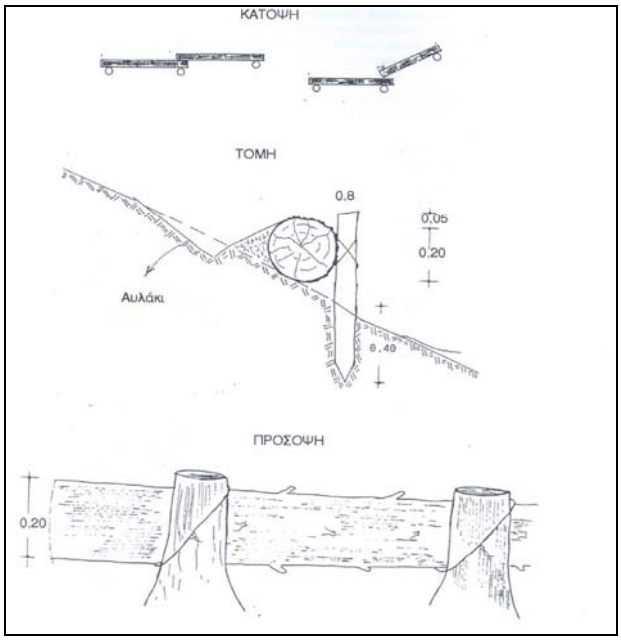

Fig. 3: Long brush barrier for slope stabilization (construction pattern) (Hellenic Ministry of environment and public works)

The distance between them depends on pitch of a slope. (Pitch 20% - 50% the distance between them is 8 m.)
The construction includes the below:

The right areas were the barriers will be placed chosen and lined on the surface soil.
Chosen the rights logs with right length.
Cleaned all end products from placed line. Cultivated slowly the soil and placed the log in contour lines and fastened exactly to the soil.

The logs are fixed with pegs with diameter 8-15 cm. These pegs are struck into the soil in 30 cm depth.
The upside formatted as groove form in order to one of its side cover until the log top.

In case not accurate touch with soil. (gaps between brunches and soil), the gaps filled with brunches or rocks or soil from excavations of grooves. With this technique controlled fine grained.

End of each line closed with rocks or woods to avoid the movement soil material and on the other hand to avoid the movement soil material of other parts.
Any stop of line must be covered from the next (Fig 3).

Advantages:

- Prevents progressive erosion and promotes siltation
- Aesthetically appealing
- Can be combined with other methods

Disadvantages:

- Higher labour costs
- Large amounts of material.

2.4 Fascines (bush wattles)

Chestnut peggs (length 1.5-2,0 m diameter 4-5 cm) are driven into the soil (depth 0.7-1.2 m) every 30 cm between them. 60 living brunches/ m of Salix Vitex e.t.c. are driven into the soil (length 1.0 m, diameter 1-5 cm) in two layers (they are built inclined) until to touch the equable part of slope. 30 of them are driven into the soil from one direction and 30 of them are driven into the soil from the other direction. The lliving bruncches covered wtih soil. (high of soil 15 cm)

This construction extended on needed parts of slope.

The same construction can be without use of chestnut pegs but the use with living brunches and their covered with soil. (fig 3)

Advantages:

- Fast and simple construction
- Little soil movement
- Useful for wet slopes or zones
- Little preparation
- Promotes development towards climax

disadvantages:

- Flexible branches necessary
- Susceptible to rockfall and shearing
- Little securing of deeper soil layers
- Labour intensive

Construction time : only possible during dormancy

Costs: for geotechnical use 1 to 3 hours/meter with engineering structures.

Use: Stabilization of top soil layers, slopes of fine material or bank toes, drainage of wet zones .

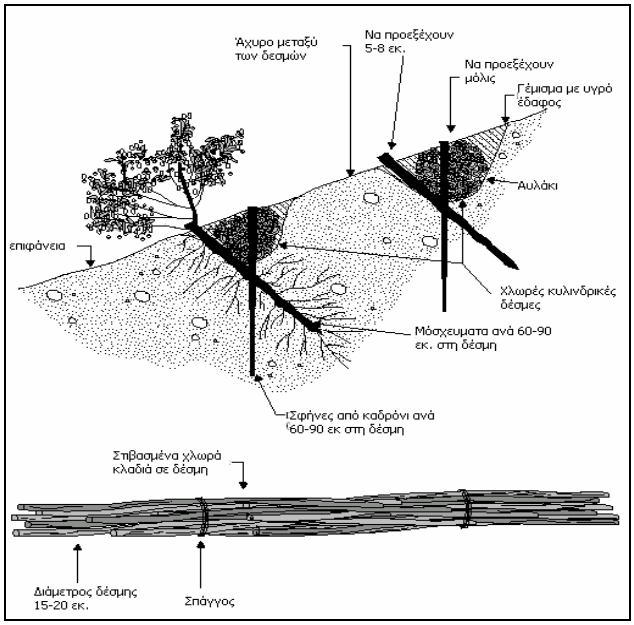

Fig. 4: Fascines for slope stabilization (construction pattern) (Schiechtl and stern 1992)

2.5 Wood fences

Wood fences are dead parts of trees or bushes. The high of construction above the surface of soil is 17.5 to 32.5 cm.

The construction includes the below:

Chosen the right areas were the wood fences will be placed and lined on the surface soil.

Chosen the right material for the construction and calculated the required number of these dead parts from the market.

Horizontal terrace create with small width.

The pegs are driven into the soil vertically in depth (0.40 m) (diameter 5-10 cm distance between them 0.80-1.00 m)

Horizontal rods (diameter 4 cm) are fixed to the pegs with wire without gaps between them.

When the length of rods is smaller than the length of fence the union between them must be done with other or peg.

The length of construction must secure the protection of slope against erosion and must broken up every 5 m to avoid the collapsing of the whole construction. (Figure 5).

Advantages:

- Prevents progressive erosion
- Combined with other methods
- Aesthetically construction

Disadvantages:

- Labor intensive
- High construction cost

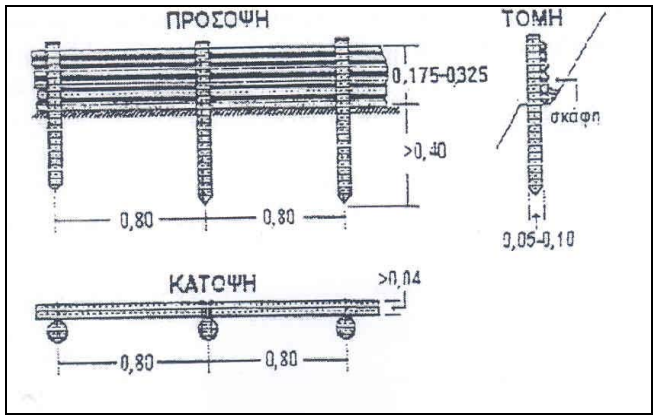

Fig. 5: Wood fences for slope stabilization (construction pattern) (Hellenic Ministry of environment and public works)

2.6 Maintenance

Biotechnical structures tend to accelerate plant succession, thereby establishing some sort of climax vegetation in a short period of time. This explains why biotechnical methods require more care and maintenance in their early stages than later on. How much work they require depends on the type of vegetation to be established and the construction method used. Care and maintenance during plant development typically includes activities such as:

(a) Fertilization

Sites where biotechnical structures are used are often poor in plant nutrients and top soil. To promote plant development, fertilization has repeatedly proven successful, especially on raw soil. On pioneer stands it promotes a much faster closing of the plant cover, which in return reduces

the risk of erosion. Mineralized fertilizers, manure, compost and cuttings are commonly used.
The amount, combination and timing of fertilizers is plant, site and time specific, and should be detailed in a fertilization plan.

(b) Irrigation

In moderate climatic zones irrigation should only be used to sludge the root stocks of new plantings, or to assist during droughts. Overly intensive irrigation jeopardizes the development of a wide-spreading root-system. On the other hand, in arid zones, or areas with very dry summers, may require irrigation to ensure successful growth.

(c) Soil cultivation and soil improvement

Loosening of soil and (mechanical) weed control promote plant development, particularly at the beginning. A 10-20 cm thick mulch layer of rotting material (especially litter, straw, grass and weed cuttings) can regulate temperature and humidity close to the soil surface, and improve soil activity.

(d) Care for trees and bushes

Woody plants may require cutting in the first 2 years to improve their health and shape. Bushes with a single main stem are cut to produce several main shoots. High stem trees and single woody shoots may require support by fastening them to pegs for the first 3-5 years.

2.7 Construction and maintenance cost

Although construction of biotechnical structures more work, the overall building and maintenance costs of reaches secured by methods using woody vegetation have proven to be cheaper than comparable conventional standard profile constructions (Anselm 1976; Schiechtl 1982; Tönsemann 1983; Dahl 1984; Anselm 1984). Unfortunately, outlining absolute prices of various biotechnical structures and their maintenance will not be helpful here for several reasons:
(1) most of the reported work on costs is about 4 years old, and so prices do not include inflation or changes of wages since then; (2) more recent reports only cover some financial aspects that, all in all, paint no different picture; (3) absolute prices would neglect the different wage and price systems in Central Europe.

To avoid these problems with absolute prices, the following references are offered:

Average construction time required for different methods: the single largest cost of a biotechnical structure is construction time, so this point should be addressed first. Costs for planning and supervision, material used and machinery vary with availability, size of a project, and region.

Average maintenance costs are offered in average percentages of the overall maintenance costs. Although changes in efficiency and wages may have occurred over time, this brief summary offers some initial references.

Ecological, social and other costs or benefits are not included in this review. These aspects, however, must be part of an overall assessment and evaluation of slope stabilization works.

2.7.1. Construction cost

Costs for planning and supervision of the construction (including surveying, negotiations with land owners, etc.) are usually 10-20% of the overall costs:

7 – 15% planning phase (first concepts, alternatives, evaluation, final concept)
3 – 7% approval phase (until the final completion of the maps)
3 – 7% realization phase (invitation for tenders, supervision of construction, accounting)

Construction costs vary. For comparisons the average required construction times for different biotechnical structures are listed in Table 1. They include the time necessary to obtain the live material and prefabricate elements (e.g. fascines). Knowing the appropriate wages, as well as the costs for machinery and materials, buildings costs of different methods in various regions can be estimated.

Table 1: Average construction time required for different biotechnical structures

Method	Mean required time
Bush mattress construction	1-5 hours /m^2
Wattle fences - wicker	0,75 – 1,5 hours/meter.
Long brush barrier	about 25-50% of the costs of hard methods
Fascines (bush wattles)	1 – 3 hours /meter with other required constructions
Wood fences	1 – 3 hours /meter

2.7.2 Maintenance cost

The initial maintenance costs of biotechnical structures are much higher (ca. 50% during the first 3 years) than those of conventional structures (Wolf 1977; Dahl and Schlüter 1983), but they become much lower, and also more steady later on. Maintenance of wood vegetation depends on maintenance frequency.

2 Conclusions

In comparison with traditional engineering techniques, the non-technical benefits of plants are often stressed along with the usual technical advantages. Four general groups of benefits of biotechnical methods can be outlined:

1. Technical advantages:

- protection against surface erosion
- an increase of slope stability by root reinforcement and draining of the soil
- protection against rock fall and wind

2. Ecological advantages:

- regulation of temperature and humidity close to the surface, thus promoting growth
- improvement of the soil water regime via interception, evapotranspiration and storage
- soil improvement and top soil formation
- improvement of and provision for habitat

3. Economic advantages:

- reduction of construction and maintenance costs
- creation of areas for agricultural and recreational use

4. Aesthetic advantages:

- structures fit into the landscape
- landscape is more appealing

These advantages make biotechnical techniques a worthwhile consideration in slope restoration

References:

[1] Anselm, H. 1976. Analyse der Ausbauverfahren, Schäden und Unterhaltungskosten von Gewässern. Mitteilungen des Instituts für Wasserwirtschaft, Hydrologie und Landwirtschaftlichen Wasserbau, TU Hannover, Report 36:11-191.

[2] Anselm, H. 1984. Verringerung der Ausgaben der Gewässerunterhaltung durch Gewässerpflege. Zeitschrift für Kulturtechnik und Flurbereinigung 25:113-121.

[3] Donat, M. 1992 MS. Gewässer als Lebensraum. o.ö. Umweltakademie, Linz, 98p.

[4] Tönsmann, F. 1983. Kostenuntersuchungen verschiedener Ausbaukonzepte im naturnahen Wasserbau. 7. DVWK-Fortbildungslehrgang Gewässerausbau – Gerinnestabilität. Darmstadt.

[5] Wolf, H. 1977. Naturnaher Gewässerausbau – Erfahrungen und Beispiele aus Baden-Württemberg. Veröffentlichungen Naturschutz und Landschaftspflege baden-Württemberg No. 46.

[6] Dahl, H.-J. 1984. Zehn Jahre Versuchsstrecke für ingenieurbiologische Ufersicherungsmaβ-nahmen an der Oberaller. Wasser und Boden 3:103-106.

[7] Schiechtl, H.M., und R. Stern. 1994. Handbuch für naturnahen Wasserbau. Eine Anleitung für ingenieurbiologische Bauweisen. Österr. Agrarverlag, Vienna.

[8] Schiechtl, H.M., und R. Stern 1992. Handbuch für naturnahen Erdbau. Eine Anleitung für ingenieurbiologische Bauweisen. Österr. Agrarverlag, Vienna.

[9] Hellenic Ministry of environment and public works. No publicated specifications on bioengineering techniques. No date.

[10] Georgi J.N. , Belstou A., Stathakopoulos I. (2001) "Landscape Design for Egnatia Highway an Infrastructure Project in Northern Greece". 38th IFLA (International Federation of Landscape Architects) World Congress Singapore 2001, Conference Proceedings, 26-29 July 2001 Singapore, U49-U57 p.p